Stainless Steel Folding Tables

ITEM: **41230** **41231** **41232** **41233**

A stainless steel folding table that sets up for service and stores flat.

These folding tables have an 18 gauge 430 stainless steel top on folding legs. They set up quickly for catering, events and extra prep space, then fold away for storage. Available in 24″ and 30″ depths, 60″ and 72″ wide.

- **18 gauge 430 stainless steel top**
- **Folding legs**
- **Stores flat**
- **30.63″ working height**
- **NSF certified**



41230 24″ x 60″



41232 30″ x 60″



41233 30″ x 72″

AT A GLANCE

Material	18 gauge 430 stainless steel
Available Sizes (D x W)	24″ deep: 60″, 72″ wide 30″ deep: 60″, 72″ wide
Height	30.63″ (778 mm)
Certification	NSF
Warranty	180 Days Limited

MODELS AND CAPACITIES

Item	Size (D x W)	Load Capacity	Net Weight
24″ DEPTH			
41230	24″ x 60″ (610 x 1524 mm)	528 lb (239.5 kg)	37.4 lb (17 kg)
41231	24″ x 72″ (610 x 1829 mm)	572 lb (259.5 kg)	45.1 lb (20.5 kg)
30″ DEPTH			
41232	30″ x 60″ (762 x 1524 mm)	605 lb (274.4 kg)	46.2 lb (21 kg)
41233	30″ x 72″ (762 x 1829 mm)	528 lb (239.5 kg)	56.1 lb (25.4 kg)

41230 | 24″ X 60″ STAINLESS STEEL FOLDING TABLE

ITEM	SIZE (D X W)	HEIGHT	LOAD CAPACITY	NET WEIGHT
41230	24″ x 60″ (610 x 1524 mm)	30.63″ (778 mm)	528 lb (239.5 kg)	37.4 lb (17 kg)

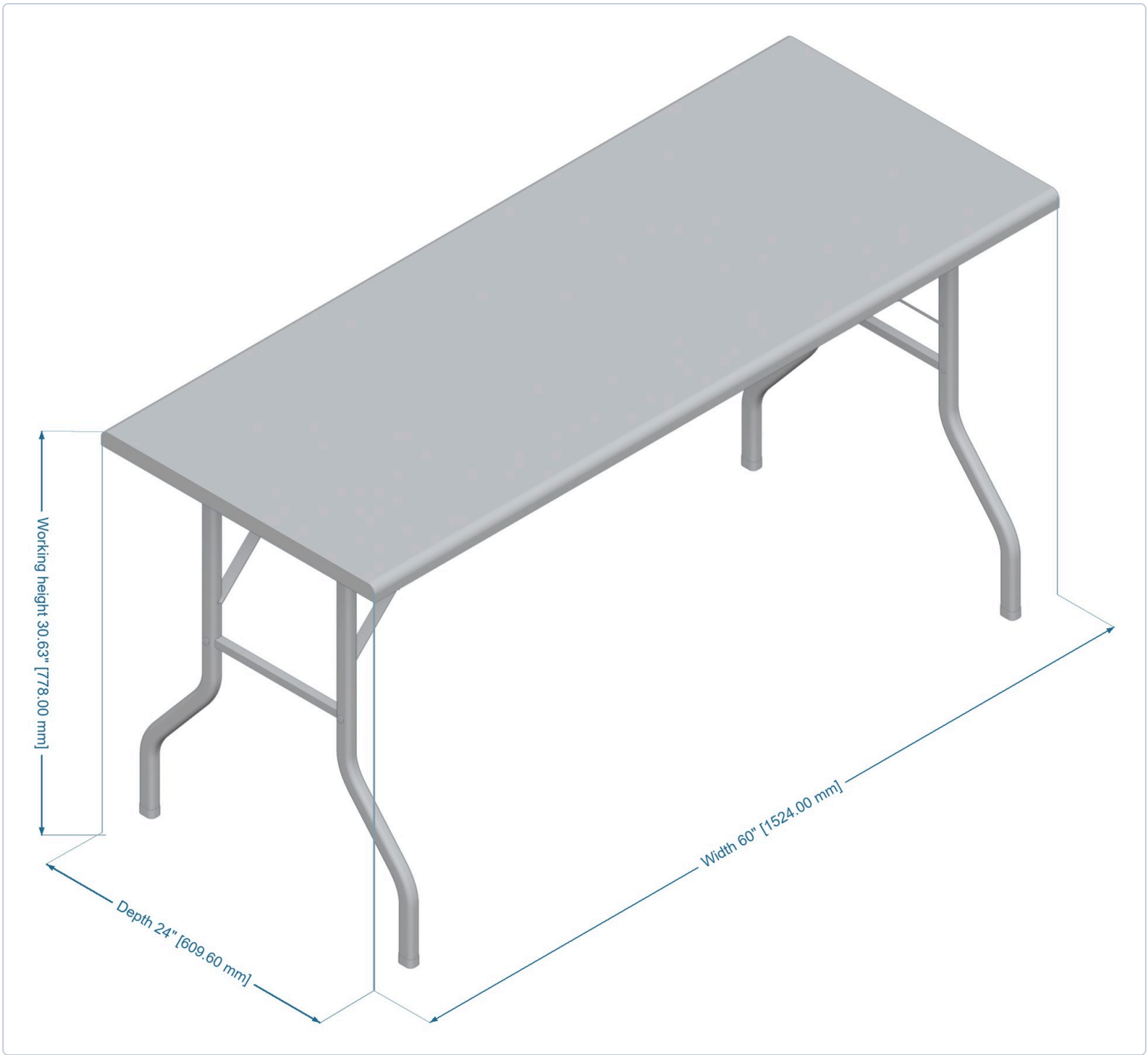

Dimensions in inches (millimetres). Use the printed dimensions, not measurements taken from the drawing. Unlabelled hardware, shelf and brace settings, and finish are illustrative.

41231 | 24″ X 72″ STAINLESS STEEL FOLDING TABLE

ITEM	SIZE (D X W)	HEIGHT	LOAD CAPACITY	NET WEIGHT
41231	24″ x 72″ (610 x 1829 mm)	30.63″ (778 mm)	572 lb (259.5 kg)	45.1 lb (20.5 kg)

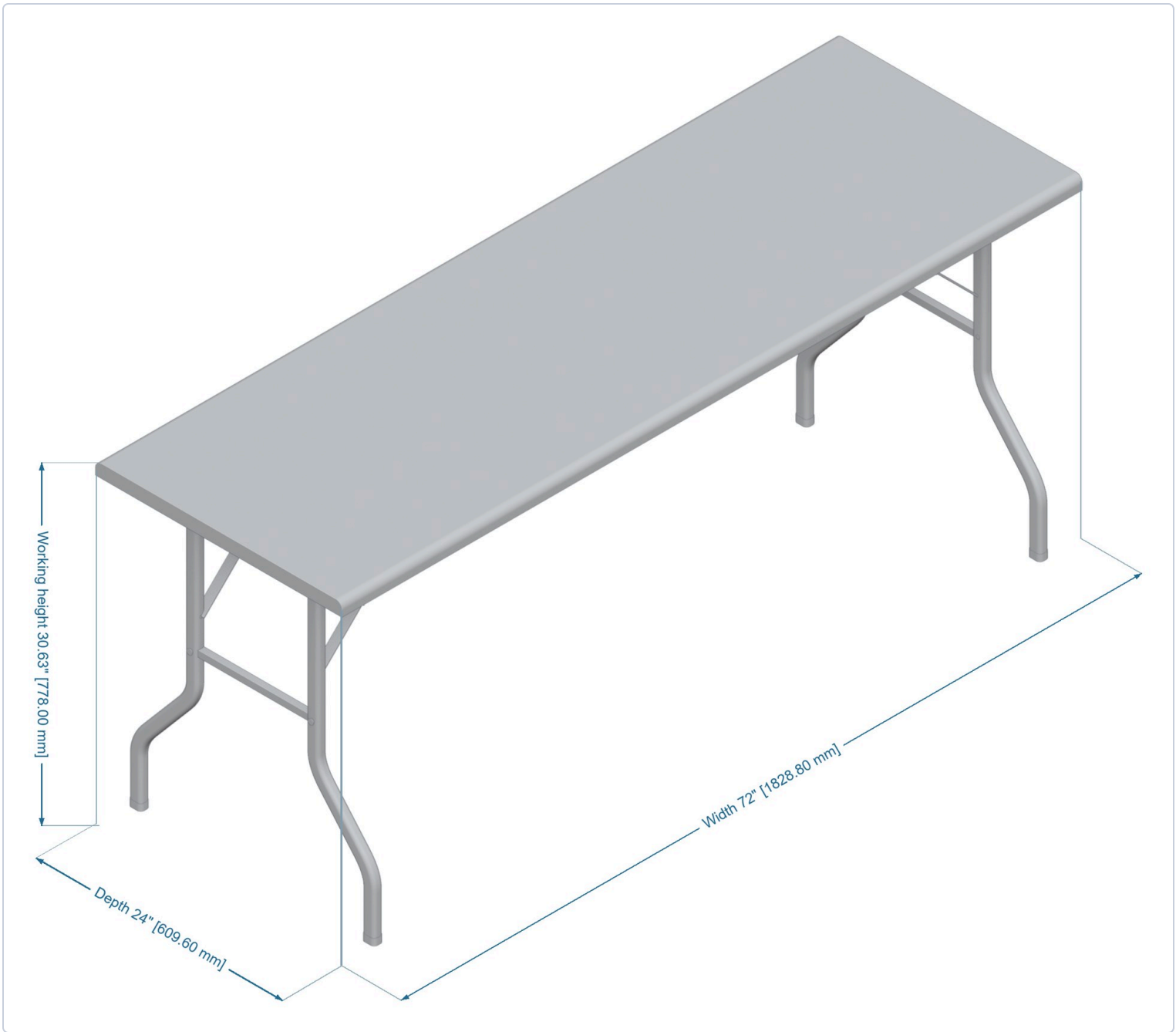

Dimensions in inches (millimetres). Use the printed dimensions, not measurements taken from the drawing. Unlabelled hardware, shelf and brace settings, and finish are illustrative.

41232 | 30″ X 60″ STAINLESS STEEL FOLDING TABLE

ITEM	SIZE (D X W)	HEIGHT	LOAD CAPACITY	NET WEIGHT
41232	30″ x 60″ (762 x 1524 mm)	30.63″ (778 mm)	605 lb (274.4 kg)	46.2 lb (21 kg)

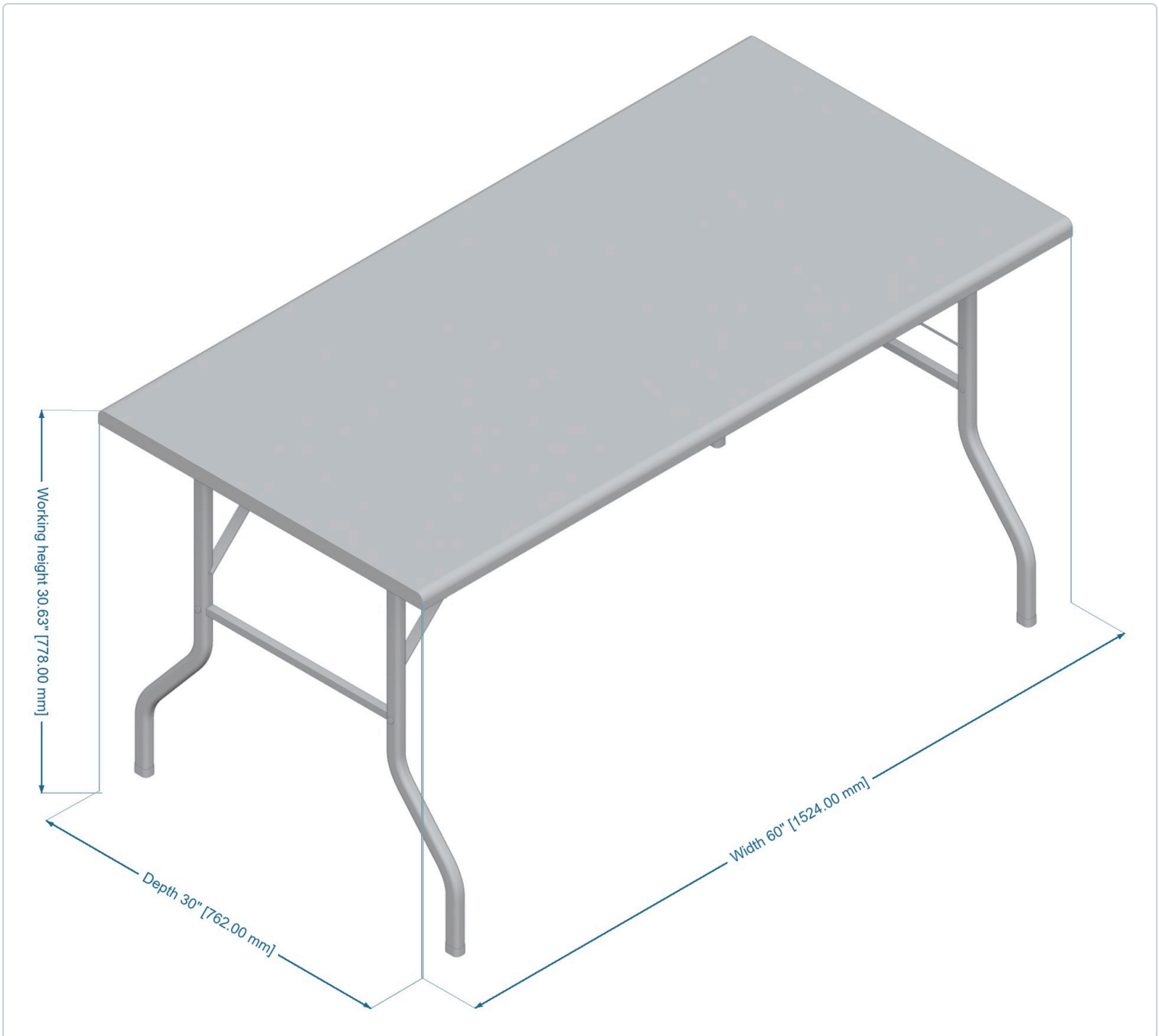

Dimensions in inches (millimetres). Use the printed dimensions, not measurements taken from the drawing. Unlabelled hardware, shelf and brace settings, and finish are illustrative.

41233 | 30″ X 72″ STAINLESS STEEL FOLDING TABLE

ITEM	SIZE (D X W)	HEIGHT	LOAD CAPACITY	NET WEIGHT
41233	30″ x 72″ (762 x 1829 mm)	30.63″ (778 mm)	528 lb (239.5 kg)	56.1 lb (25.4 kg)

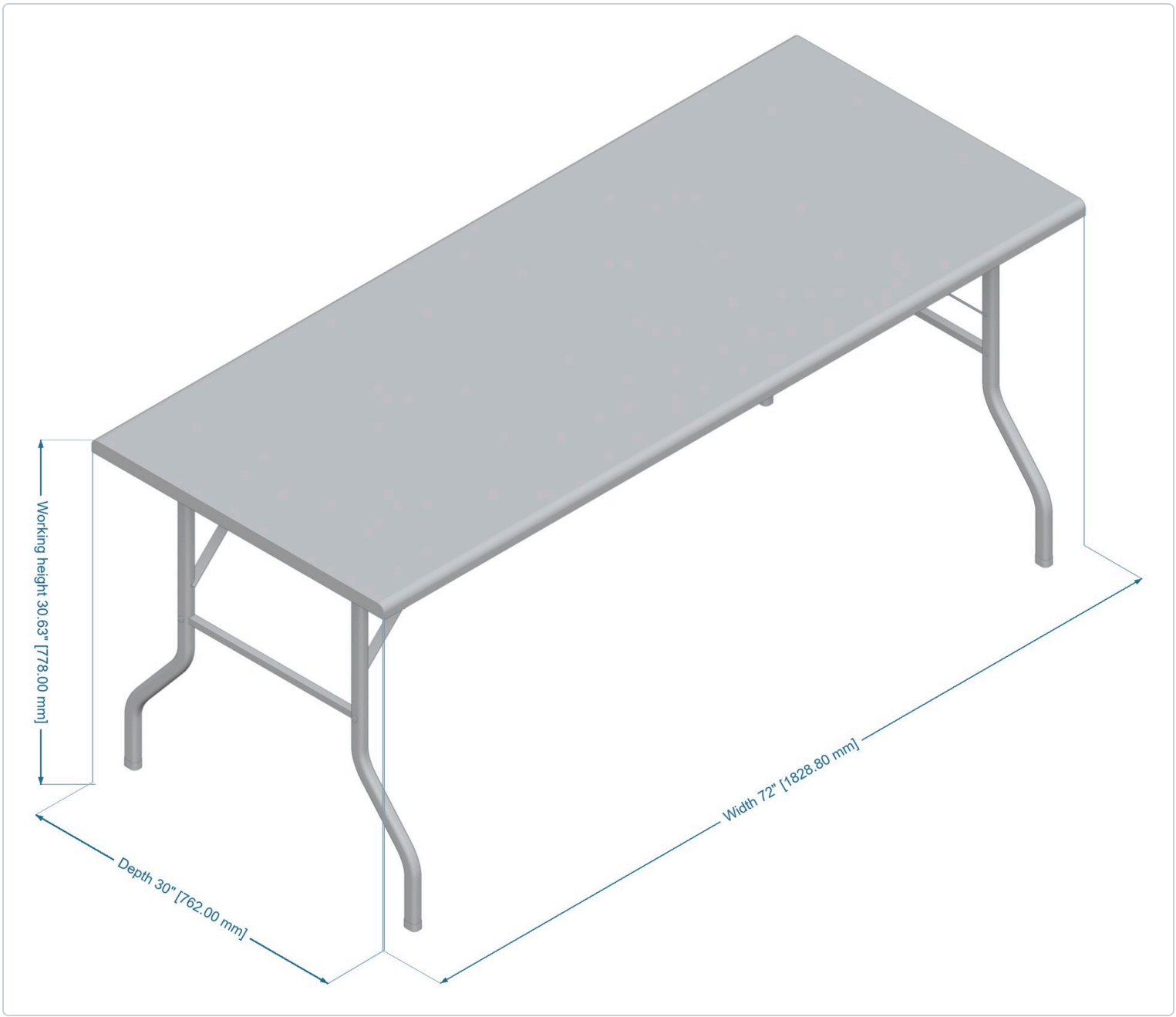

Dimensions in inches (millimetres). Use the printed dimensions, not measurements taken from the drawing. Unlabelled hardware, shelf and brace settings, and finish are illustrative.